SECTION E
CASSETTE INTERFACE MODIFICATION

E-0 GENERAL

The Prophet-5 cassette interface enables the permanent storage of any 40-program file contained in the Prophet's non-volatile program memory (NVM) on common audio tape. This allows you to retain an unlimited number of Prophet programs, and provides program protection (backup) from component failure. Also you can immediately personalize another Prophet for your own use, since reprogramming takes less than a minute.

NOTE. AT THIS TIME, PROPHET CASSETTE INTERFACES ARE NOT COMPATIBLE BETWEEN "REV 2" INSTRUMENTS (S/N 184 - 1299) AND "REV 3" (S/N 1300 and up).

E-1 FUNCTION

The general function of the interface is as follows. First, the Prophet's back panel RECORD switch is set to DISABLE, to protect the NVM file. After two switch operations (actual operation instructions are below), a series of "sync" pulses appears at the TO TAPE jack installed on the back panel. The recorder is placed into RECORD mode. After 20 seconds, allowing the tape leader to pass and the tape speed to stabilize, the programs filed in NVM are sent (written) to the recorder. This takes about 30 seconds. When done, an indicator blinks.

To insure that the data has been correctly recorded, the procedure includes a verification test. The recording is played back into the Prophet, where the computer checks for an exact match with the contents of NVM.

To reprogram the Prophet by loading a program file from tape, first the back panel RECORD switch is ENABLED. The recorder plays back the file, which replaces the existing contents of NVM. (If you were to monitor this tape you would first hear a steady tone—which are the sync pulses—followed by erratic noise—the data itself.) The sequence concludes with a comparison of the new contents of NVM with the recorded data.

E-2 RECORDER AND TAPE SELECTION

There are two basic types of cassette recorders: portables and high-fidelity components. Virtually any good portable recorder will work satisfactorily with the interface. High-fidelity cassette decks will work too. But since high-fidelity contributes little to the recording of digital data, an expensive component deck is not at all necessary.

In other words, you can try any recorder you may already own, including reel-to-reel, with the interface. But if you intend to acquire one for specific use with the Prophet, here are some features to look for in a portable recorder:

- AC-supply, included or available, to regulate tape speed.
- Tape counter, for indexing multiple files on the same cassette.
- Built-in microphone, handy for voice-announcing files.
- Built-in speaker, for monitoring voice announcements and locating files.

- MIC or LINE IN jack.
- EAR or MONITOR jack.
- Adjustable output level in play

The cassette interface verification system prevents accidental recording over a "dropout"—or any problem area—on the tape. So dropout-tested tape is not usually necessary. High fidelity is also a secondary consideration with regard to tape selection. But once recorded, a file's permanence will depend on the durability of the emulsion and the reliability of the cassette mechanism itself. So while true that even the most exotic audio tape formulations may not be 100% dropout-tested, thus causing occasional problems, we recommend the use of high-fidelity cassettes because they generally have tough emulsions. Besides being less likely to jam, "name" cassettes assembled with machine screws are preferred since they can be opened and repaired without damage to the shell.

E-3 CONNECTIONS

For connector installation, see documents below.

1. Cable from "TO CASSETTE" jack on Prophet back panel to recorder input, typically MIC or LINE IN.

2. Cable from recorder output, typically EARPHONE or MONITOR, to "FROM CASSETTE" jack on Prophet back panel.

E-4 RECORD AND PLAYBACK LEVELS

Cassette interface recording is quite different from typical audio practice, where the tape is rarely allowed to saturate. For recorders with VU meters, levels should be at 0-dB or above (into the red). Recorders with single-LED peak detectors should be set so the LED stays lit. Record level is automatically adjusted in recorders with ALC.

The reference for these adjustments is the 20-second sync train preceeding the data transfer.

The rule-of-thumb for playback level on portable recorders is about 75% of full volume. The interface is difficult to overdrive, but this can happen. You might experiment by finding the low and high level limits of trouble-free operation, then set the level mid-way between them.

E-5 PRECAUTIONS

- Use an AC-supply with portable recorders. Use of (weak) batteries may cause tape speed variations outside of the interface's range.
- Don't copy tapes between recorders. Instead, load the master into the Prophet and record the copy from the Prophet.
- If using a stereo deck, record on both channels simultaneously to preserve monophonic compatibility. (Otherwise playback noise from an unrecorded channel could interfere with file LOADING.)
- For protection from loss or damage, maintain a duplicate set of cassettes in a safe place.

E-6 SAVING TO TAPE

1. Check that the Prophet's back panel RECORD switch is DISABLED.
2. Insert cassette into recorder and REWIND to start of tape.
3. Check record and playback levels as discussed above.
4. Place recorder into RECORD mode and wait 5 seconds for the tape leader to pass.
5. Hold the Prophet's orange RECORD switch while pressing the grey TO TAPE switch (MODULATION PRESET).
6. The Prophet front panel will go dark.
7. When, after about 40 seconds, the grey FROM TAPE switch indicator (FILTER PRESET) blinks, STOP the RECORDER.
8. Rewind to start of tape.
9. Place recorder into PLAY mode and wait about 10-seconds for the tape leader to pass.
10. Press the (blinking) FROM TAPE switch.
11. The FROM TAPE switch indicator will remain lit. When it goes out, STOP the recorder.

    NOTE. With verification complete, the Prophet now enters its TUNE routine and will "come-up" with PROGRAM 1-1 after a few seconds.
12. If the FROM TAPE switch indicator instead blinks, an error has occured. Try steps 8 through 11 again.
13. If step 12 fails, try from step 2 again. Check record and playback levels. Try a new cassette.
14. It is possible to store more than one program file on a cassette. Be careful to leave plenty of time (1 - 2 minutes) between them on the tape. You may wish to voice-announce each file, for example, "Prophet file number 4, containing...follows in ten seconds.

E-7 LOADING FROM TAPE

1. Check that the Prophet's back panel RECORD switch is ENABLED.
2. REWIND to start of tape.
3. Check playback level.
4. Place recorder into PLAY mode and wait about 10 seconds for the tape leader to pass.
5. Hold the Prophet's orange RECORD switch while pressing the FROM TAPE (FILTER PRESET) switch.
6. The Prophet front panel will go dark, except the FROM TAPE switch indicator will be lit.
7. When, after about 40 seconds, the indicator goes out, STOP the recorder.
8. If the indicator instead blinks, an error has occured. Try from step 2 again.

E-8 PROBLEMS

If recorders A and B have each been used satisfactorily by themselves, and tapes exchanged between them produce errors, the two recorders probably have quite different tape speeds. The same error could occur on one recorder operated at one time from (weak) batteries and another time from an AC-supply.

To isolate the problem, try cross-verification as follows. Refer to paragraph E-6.

1. Write and verify a file to recorder A according to E-6, steps 1-11.
2. Disconnect TO TAPE cable from recorder A's input.
3. Transfer FROM TAPE cable from recorder A to recorder B's output.
4. Transfer the cassette from recorder A to recorder B.
5. Perform E-6, steps 3 - 6 again.

   NOTE. Nothing is recorded with the TO TAPE cable disconnected. This step simply brings up the verification test again.
6. After 50 seconds, perform E-6, steps 8 - 11 from recorder B.
7. If verification is successful, the cassette will be able to be used on both recorders.
8. If verification is not successful, the speed difference between the recorders probably exceeds the +/–10% range of the interface.

E-9 THEORY

The cassette interface hardware is simple. For storing on tape, bits are serially-latched out through port CSB, U331-7 (see SD311, page 3-15), filtered by R106/C101 (see schematic SD101, below), and ac-coupled to the recorder input by C102. For loading from tape, the pulses are ac-coupled by C103 and squared-up by the CASS CPR which, as a zero-crossing detector, is insensitive to phase or polarity variations between recorders. R109 and R102 form a divider parallel with divider R107, R110, R108, and R104.

D101 clamps the pulses to not exceed –0.6V. Read bits are input through port CSF (U330-10, see SD312, page 3-16). Since allowance must also be made for speed variations, a technique of counting edges rather than identifying logic states must be used.

Organized as 40 24-byte programs, NV RAM contains 960 bytes. The least-significant seven bits of each byte represents a pot setting of 0 - 127 steps, while the MSB represents a switch setting (1=on, 0=off). (When selecting a program in PRESET mode, a set of twenty-four bytes is transferred to the Scratchpad, with the pot bits filling the pot table and the switch bits being regrouped into the switch status table.) Interface timing is based on a unit called a minim, which is equivalent to 232.4 us. Each bit is transmitted or received over a 12-minim period (2.8 ms), with a few-microsecond space between them. To write, the interface simulates frequency-shift keying (FSK) by toggling the output latch every minim to indicate a 1, and every fourth minim to indicate a 0. These rates correspond to approximately 2151 Hz (1/234 us × 1/2) and 538 Hz (2151 Hz/4). When reading from tape the interface counts the edges received and loads a 1 or 0 into NV RAM depending on whether the number of edges is greater or less than seven. The absolute number of edges need not be detected in any specific period, thus providing range to accommodate wow and flutter in the cassette deck.

E-10 CASSETTE MODIFICATION KIT

To add the cassette interface to a specific "Rev 2" Prophet-5, order CK1. Direct all inquiries and orders to the Service Department. Be sure to specify the software version currently installed in the Prophet. The kit contents are listed below. Software versions are listed in Section F.

E-11 DOCUMENTS

Document List

SD101	SCHEMATIC
PP101	PARTS ID
WL101	WIRING
MD102	INSTALLATION
BM101	CK1 BILL OF MATERIALS

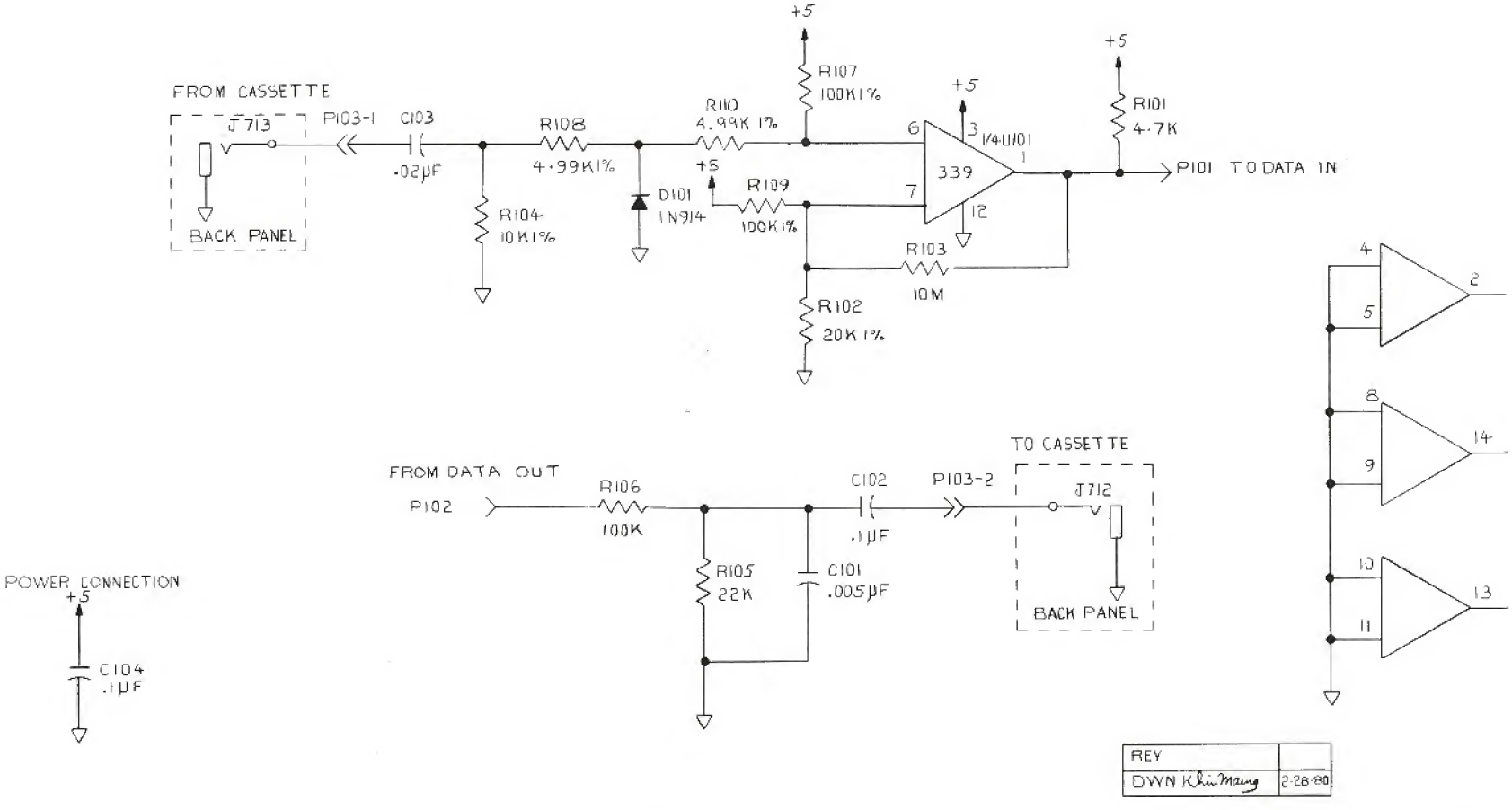

REV	
DWN Khin Maung	2-28-80

UNLESS OTHERWISE SPECIFIED DIMENSIONS ARE IN INCHES TOLERANCES ARE:
FRACTIONS ± DECIMALS .XX ± .XXX ± ANGLES ±
MATERIAL
FINISH
SCALE NONE

FIRST S/N	LAST S/N	DATE	ECR No	REVISION	LTR
					J
					H
					G
					F
					E
					D
					C
					B
					A

SEQUENTIAL CIRCUITS INC

TITLE CASSETTE INTERFACE OPTION

		DATE	SIZE	MODEL No. 1000
DSN	CM Wood			
DWG	[signature]	3/24/80	DOCUMENT No.	SD101
APP	[signature]	3/25/80		
ISS	[signature]	3/24/80		SHEET 1 OF 1

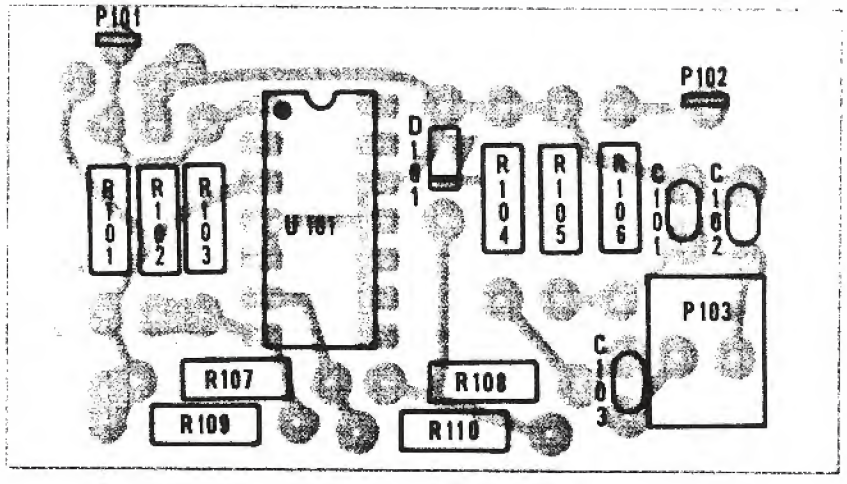

UNLESS OTHERWISE SPECIFIED DIMENSIONS ARE IN INCHES TOLERANCES ARE: FRACTIONS ± DECIMALS XX ± XXX ± ANGLES ±						J
MATERIAL						H
						G
						F
						E
FINISH						D
						C
						B
SCALE 2:1	FIRST S/N	LAST S/N	DATE	ECR No	REVISION	A / LTR

SEQUENTIAL CIRCUITS INC

TITLE: CASSETTE INTERFACE OPTION

DSN	DATE	SIZE A	MODEL No 1000-1
DWG [signature]	3/3/80	DOCUMENT No. PP101	
APP	2-28-80		
ISS [signature]	3-27-80		SHEET 2 OF 2

SEQUENTIAL CIRCUITS INC

WIRE LIST WL-101

HARNESS NO.	NEXT ASSY.	DATE	MODEL	PAGE
	PC 101	3-13-80	1000-1	1 OF 1

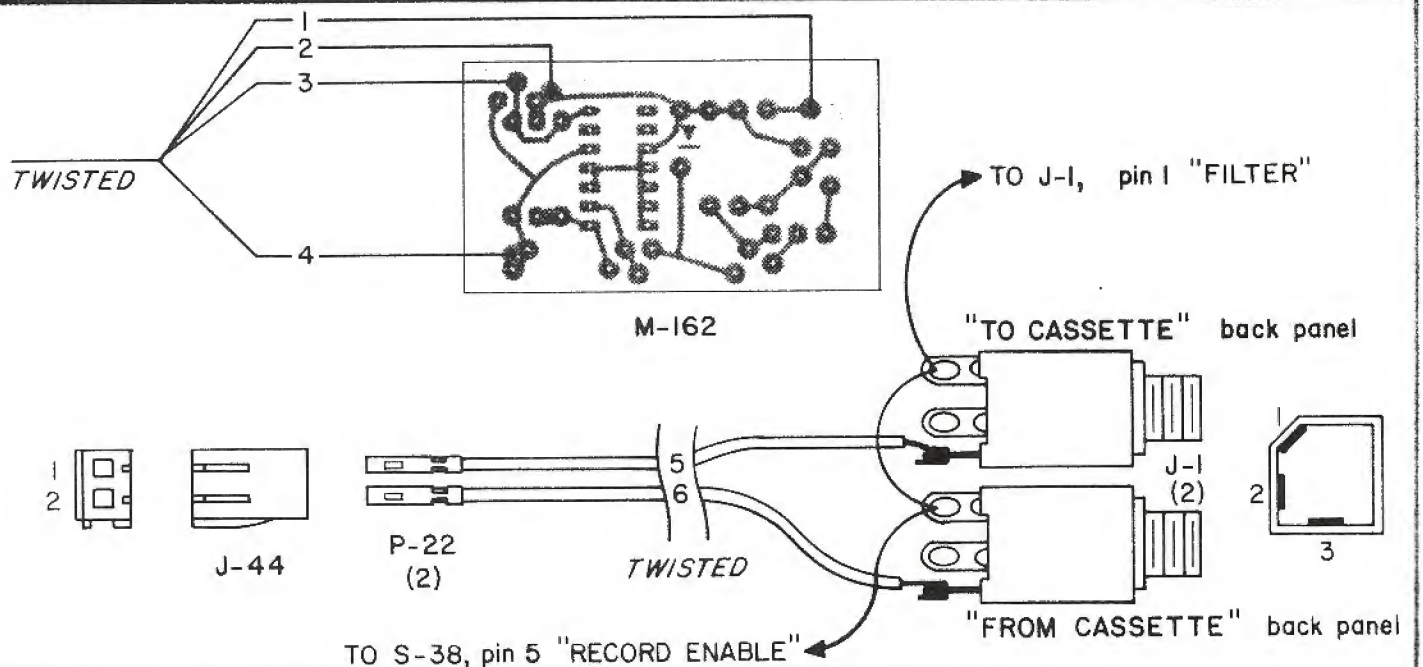

WIRE NO.	SIZE	COLOR	LENGTH	FROM	TO	REMARKS
1	22	GRAY	3-1/2"	M-162, SER OUT	PCB 3, LOAD OUT	E-055 SOLDER TO BOTTOM OF LOAD "OUT" PIN
2	22	BLACK	1-1/2"	M-162, GND	GND (see MD 102, 2/2)	E-054
3	22	BROWN	9"	M-162, SER IN	PCB 3, LOAD IN	E-057 SOLDER TO BOTTOM OF LOAD "IN" PIN
4	22	RED	3"	M-162, +5	+5 (see MD 102, 2/2)	E-059
5	22	GREEN	33-1/2"	M-162, J-44, pin 1	J-1, pin 3	E-062 ATTACH TO MAIN WIRE HARNESS w/3 M-140's
6	22	TAN	34-1/2"	M-162, J-44, pin 2	J-1, pin 3	E-060 "

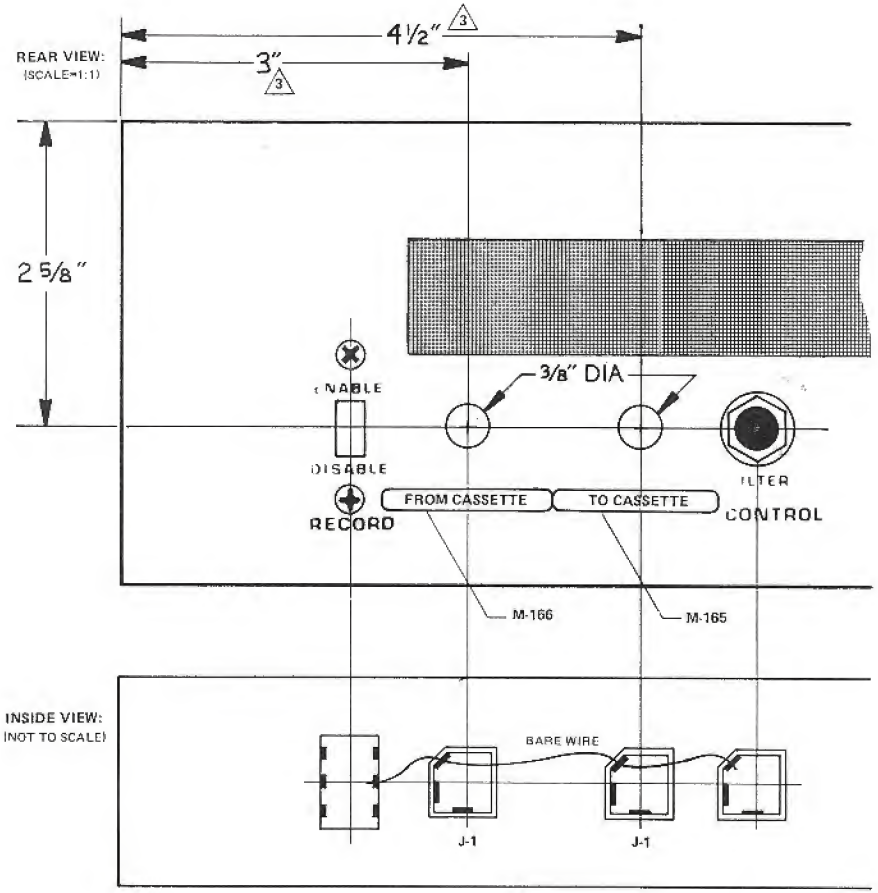

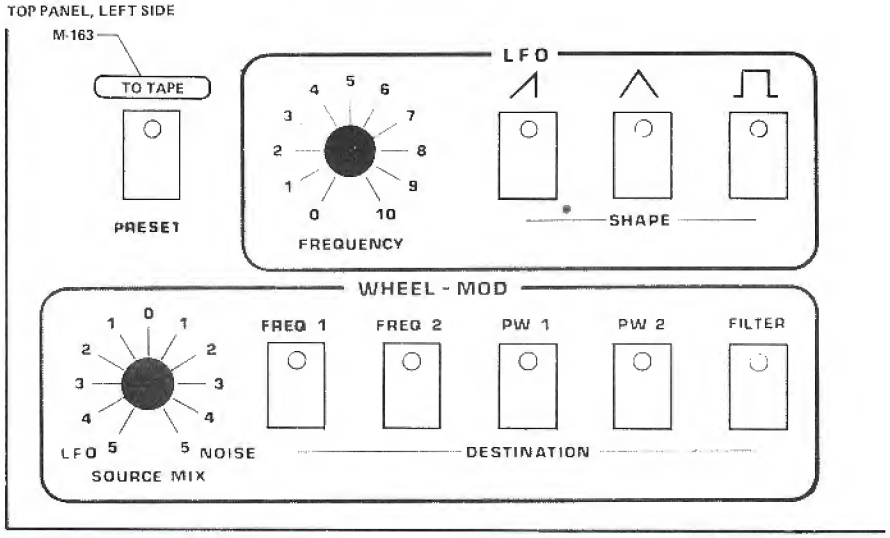

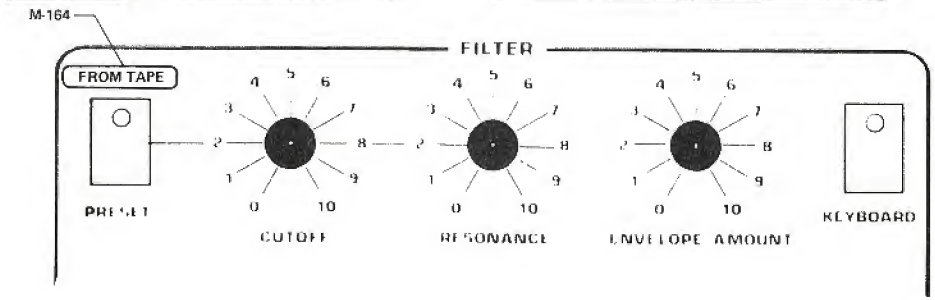

NOTES:

1. FOR ADDITIONAL INFORMATION SEE WIRE LIST, DOCUMENT No. WL-101 (MODEL 1000-1).
2. TO MOUNT PC BOARD, SEE "CASSETTE PC INSTALLATION," DOCUMENT No. MD-102, SHEET 2.

3. DIMENSIONS SHOWN ARE FOR SYNTHESIZERS WITH SERIAL No. 0001 THROUGH 0181. FOR SERIAL No. 0182 AND ABOVE (EXCLUDING REV. 3), ADD 3/16".

UNLESS OTHERWISE SPECIFIED DIMENSIONS ARE IN INCHES TOLERANCES ARE: FRACTIONS ± DECIMALS XX ± XXX ± ANGLES ±						
MATERIAL						J
						H
						G
						F
						E
						D
FINISH						C
						B
SCALE	FIRST / LAST S/N	DATE	ECR No.	REVISION		A
						LTR

SEQUENTIAL CIRCUITS INC

TITLE: CASSETTE INTERFACE OPTION
BOTTOM PANEL MODIFICATIONS

DSN	3/17/80	SIZE B	MODEL No. 1000-1
DWG	3/17/80	DOCUMENT No. MD-102	
APP	3/24/80		
ISS	3/24/80		SHEET 1 OF 2

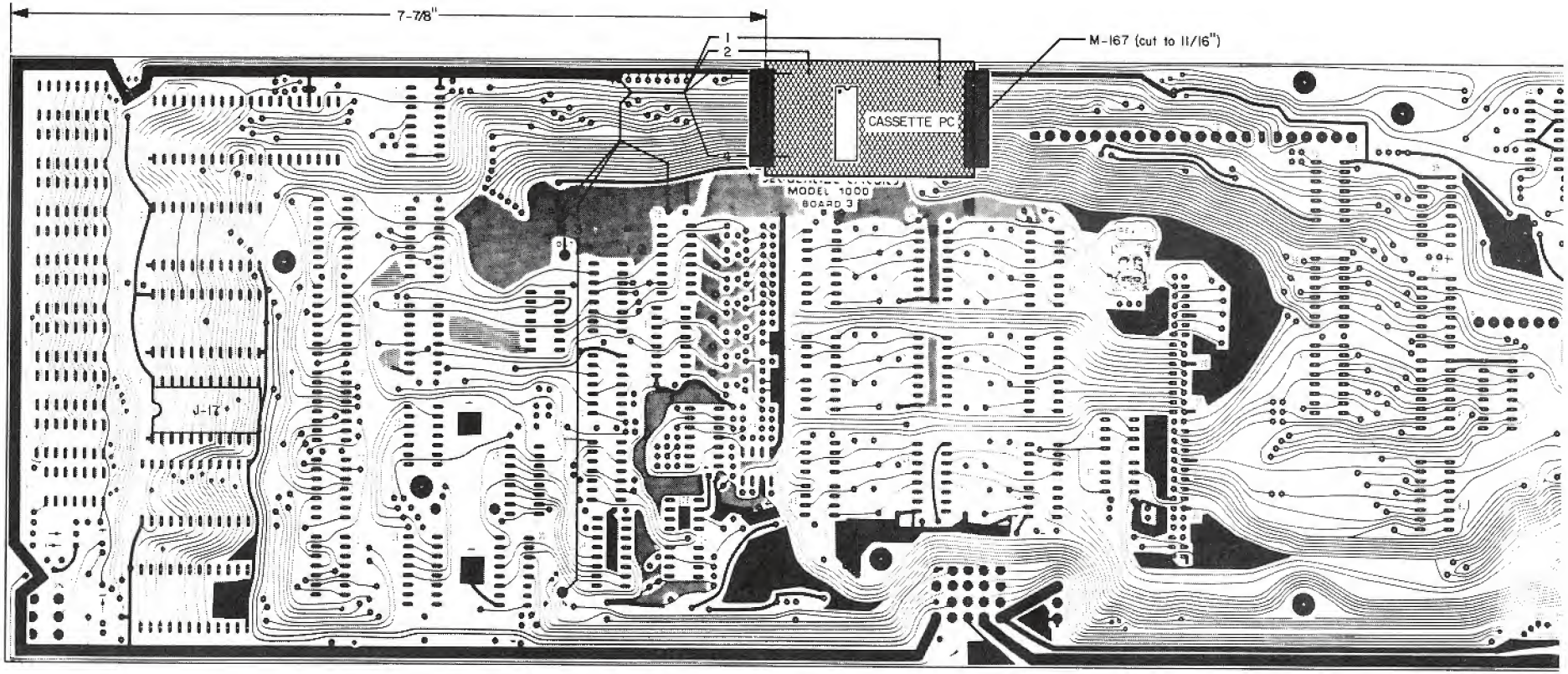

UNLESS OTHERWISE SPECIFIED DIMENSIONS ARE IN INCHES TOLERANCES ARE: FRACTIONS ± DECIMALS .XX ± .XXX ± ANGLES ±					J	SEQUENTIAL CIRCUITS INC
					H	
					G	TITLE: CASSETTE INTERFACE OPTION PC INSTALLATION
MATERIAL					F	
					E	
					D	DSN — DATE — SIZE B — MODEL No. 1000-1
FINISH					C	DWG — 3/24/80 — DOCUMENT No. MD 102
					B	APP — 3/24/80
SCALE 1:1	FIRST / LAST S/N	DATE	ECR No.	REVISION	A / LTR	ISS — 3/24/80 — SHEET 2 OF 2

MODEL: CK1 CASSETTE MOD KIT

LINE	ITEM	DESCRIPTION	QTY
003	Z-047	CASSETTE INTFC PCB ASSY	1
004	M-163	"TO TAPE" LABEL	1
005	M-164	"FROM TAPE" LABEL	1
006	M-165	"TO CASSETTE" LABEL	1
007	M-166	"FROM CASSETTE" LABEL	1
008	M-169	C-10 CASSETTE	1
009	M-182	3/8" STARWASHER	2
010	J-001	1/4" PHONE, SHORTING	2
011	J-017	24 PIN DIP SOCKET	1
012	I-027	2708 1024X8 EPROM	3
013	Q-037	1000.2 CASS INTFC OP NOTE	1
016			
017	Z-047		
020	C-014	.02 50V MYLAR	1
022	C-016	.1 50V CERAMIC CAP	1
024	C-045	.1UF 50V DECOUPLER	1
026	C-046	.0056 MYLAR 100V	1
028	D-005	1N914	1
030	E-054	22 AWG STRANDED BLACK	1
032	E-055	22 AWG STRANDED GREY	1
034	E-057	22 AWG STRANDED BROW	1
036	E-059	22 AWG STRANDED RED	1
038	E-060	22 AWG STRANDED TAN	3
040	E-062	22 AWG STRANDED GREEN	3
044	I-302	339 QUAD COMPARATOR	1
049	J-044	2-PIN MOLEX HOUSNG	1
050	M-162	CASS INTFC PCB	1
052	P-022	PINS GOLD	2
054	P-044	2-PIN MOLEX GOLD PLUG	1
056	R-011	4.7K 1/4W 5%	1
058	R-025	100K 1\4W 5% RESISTOR	1
060	R-040	22K, 5%	1
062	R-045	10M 5% RESISTOR	1
064	R-107	4.99K 1% RESISTOR	2
066	R-108	10K 1% RESISTOR	1
068	R-110	100K 1% 1/4W	2
070	R-144	20.0K, 1%	1